MICROTECH (HONG KONG) LTD.
Tel: +852-2799 4649 Fax: +852-2121 8310 Email: info@microtech-hk.com



# ILLUSTRATION

## 1) DIMENSION

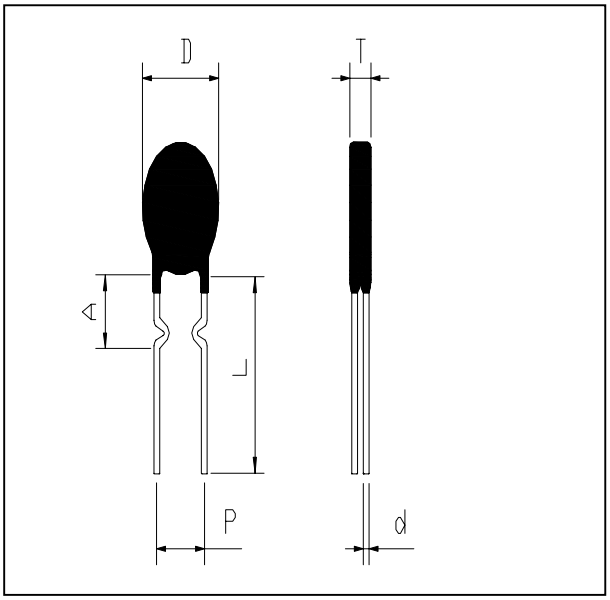


| DIMENSION(mm) | |
|---|---|
| D | Max. 13.5 |
| T | Max. 6.0 |
| P | 7.5±1.0 |
| L | Min. 20.0 |
| A | Max. 5.0 |
| d | Φ0.8±0.05 |

## 2) PART NUMBER

NTC-5D-13 (F)

NTC Thermistor

Resistance: (R25℃-5Ω)

Shape: Φ 13

Wire Form- F:Forming
S:Straight,
LK:Insidkink, OK:Outsidekink

## 3) MATERIALS

Coating Material : Penol Coating

Color of coating : Black

Lead wire : Sn/Cu coated copper wire

MICROTECH (HONG KONG) LTD.
Tel: +852-2799 4649 Fax: +852-2121 8310 Email: info@microtech-hk.com



## 4) ELECTRICAL CHARACTERISTICS

| | ITEM | CONDITIONS | SPECIFICATIONS |
|---|---|---|---|
| 4-1 | Resistance | Resistance at 25℃ | 5Ω±20% |
| 4-2 | B Value | B(R25/R85) | 3000K±7% |
| 4-3 | Insulation resistance | at DC 500V | Min. 100 MΩ |
| 4-4 | Thermal time constant | Still air | 70 sec. ±15% |
| 4-5 | Dissipation constant | Still air | 15.0 mW/℃ ±15% |
| 4-6 | Max. Steady current | 25℃ | 5.0A |
| 4-7 | Operating temperature | - | -40℃ ~ 125℃ |

# RELIABILITY TEST

| Test item | Test condition | Criteria |
|---|---|---|
| Dry Heat | 125℃, 1000hrs | Deviation of resistance at 25℃ from the original value after test within ± 5%.<br><br>Deviation of B value (B25/85) from the original value after test is within ± 5%. |
| Cold | -25℃, 1000hrs | |
| Damp Heat | 40℃/95%RH,1000hrs | |
| Thermal shock | -30 ～120℃/20cycles | |

# TRIAL SPEC.

**1-1. Test Condition**

1-1-1. Standard Condition : At each test, standard conditions excepted for specified condition is identified as follows.

1) Temperature : 15 ~ 35℃

2) Relative Humidity : 25 ~ 85%

3) Atmospheric Pressure : 860 ~ 1016mbar

1-1-2. Basic condition : On the basic condition it is identified as belows in case of standard temperature.

1) Temperature : 25℃

2) Relative Humidity : 50%

3) Atmospheric Pressure : 1013mbar

**1-2. Electrical Performance Test**

1-2-1. No loaded resistance value (R0@T ℃)

At some temperature, thermistor is tested on the condition that there is no electrical radiation. A constant temperature thermostat is within ±0.02 ℃ for temperature tolerance which is doubled 1000 volumes.

1-2-2. B Constant, β@T1/T2

It is specified for resistance change size between two some temperature.

In general, it is calculated by following method.

$$B(T1/T2) = \frac{Ln(R@T1/R@T2)}{1/T1-1/T2} \quad (\text{단 } T1<T2)$$

R@T1 = Resistance value in the absolute temperature T1

R@T2 = Resistance value in the absolute temperature T2

T1, T2 = Absolute temperature (K= ℃ + 273.15)

1-2-3. Temperature Time Constant (τ)

The temperature of thermistor tests time taken by change as 63.2% difference between the beginning temperature(Ti) and the last temperature(Te).

**1-3. Environment Test**

1-3-1. Dry Heat Test

After the finished goods is alone in the air of 125±5 ℃ temperature for 1000 hour continuously, it should be alone on the high temperature for over one hour.
The Change ratio for resistance value after test and B Constant for beginning value should be within ±5%.

1-3-2. Cold Test

After the finished goods is alone in the air of -25±5 ℃ temperature for 1000 hour continuously, it should be alone on the high temperature and high humidity for over one hour.
The Change ratio for resistance value after test and B Constant for beginning value should be within ±5%.

1-3-3. Damp Heat Test

After the finished goods is alone at 40±5 ℃ temperature and relative humidity 95% for 1000 hour continuously, it should be alone on the high temperature and high humidity for over one hour.
The Change ratio for resistance value after test and B Constant for beginning value should be within ±5%.

1-3-4. Thermal Shock Test

After below condition is performed 20 cycles with one cycle, resistance value and change ratio for B Constant beginning value should be within ±5%.

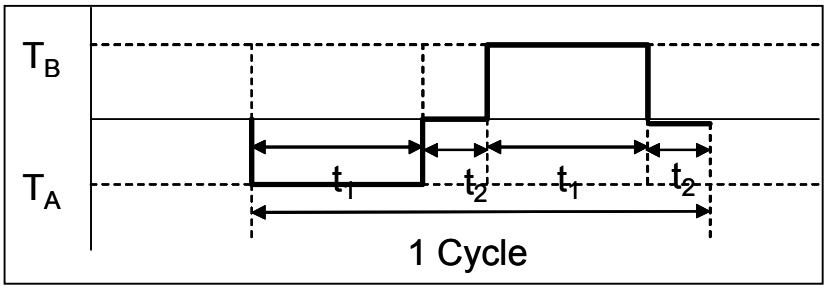


here,
TA: -30℃
TB: +120℃
t1: 30min.
t2: 20sec.~ 30sec.

MICROTECH (HONG KONG) LTD.
Tel: +852-2799 4649 Fax: +852-2121 8310 Email: info@microtech-hk.com



# PACKING SPEC.

*** BULK BOX**

1) INNER PACKING BOX

- QUANTITY : 250PCS
- DIMENSION : 185/LX140/WX38/H (mm)

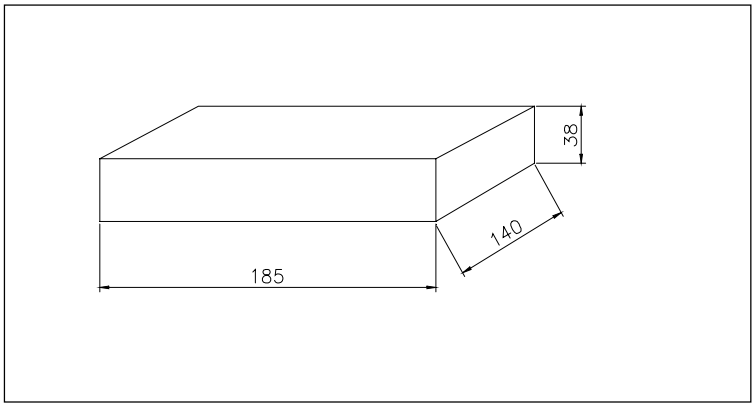


2) OUT PACKING BOX

- QUANTITY : 14(INNER) X 250PCS = 3,500PCS/BOX
- DIMENSION : 530/LX330/WX280/H (mm)

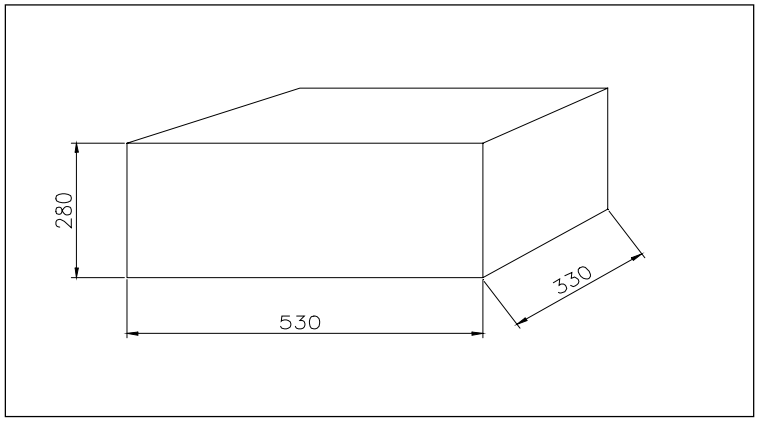

MICROTECH (HONG KONG) LTD.
Tel: +852-2799 4649 Fax: +852-2121 8310 Email: info@microtech-hk.com

# R-T Charactristics

M0DEL : NTC-5D-13(F)
(25/85) : 3000K

DATE : OCT. 10, 2006
UNIT : Ω

| Temp.[℃] | STD | Temp.[℃] | STD | Temp.[℃] | STD | Temp.[℃] | STD | Temp.[℃] | STD |
|---|---|---|---|---|---|---|---|---|---|
| -40 | 82.65 | -5 | 15.41 | 30 | 4.24 | 65 | 1.52 | 100 | 0.66 |
| -39 | 78.23 | -4 | 14.78 | 31 | 4.10 | 66 | 1.48 | 101 | 0.65 |
| -38 | 74.08 | -3 | 14.19 | 32 | 3.97 | 67 | 1.44 | 102 | 0.63 |
| -37 | 70.19 | -2 | 13.62 | 33 | 3.84 | 68 | 1.41 | 103 | 0.62 |
| -36 | 66.53 | -1 | 13.08 | 34 | 3.72 | 69 | 1.37 | 104 | 0.61 |
| -35 | 63.09 | 0 | 12.56 | 35 | 3.61 | 70 | 1.34 | 105 | 0.59 |
| -34 | 59.85 | 1 | 12.06 | 36 | 3.50 | 71 | 1.30 | 106 | 0.58 |
| -33 | 56.80 | 2 | 11.59 | 37 | 3.39 | 72 | 1.27 | 107 | 0.57 |
| -32 | 53.93 | 3 | 11.15 | 38 | 3.28 | 73 | 1.24 | 108 | 0.56 |
| -31 | 51.23 | 4 | 10.72 | 39 | 3.18 | 74 | 1.21 | 109 | 0.55 |
| -30 | 48.69 | 5 | 10.31 | 40 | 3.09 | 75 | 1.18 | 110 | 0.54 |
| -29 | 46.29 | 6 | 9.92 | 41 | 3.00 | 76 | 1.15 | 111 | 0.53 |
| -28 | 44.03 | 7 | 9.54 | 42 | 2.91 | 77 | 1.12 | 112 | 0.52 |
| -27 | 41.89 | 8 | 9.19 | 43 | 2.82 | 78 | 1.09 | 113 | 0.50 |
| -26 | 39.88 | 9 | 8.85 | 44 | 2.74 | 79 | 1.07 | 114 | 0.49 |
| -25 | 37.97 | 10 | 8.52 | 45 | 2.66 | 80 | 1.04 | 115 | 0.48 |
| -24 | 36.17 | 11 | 8.21 | 46 | 2.58 | 81 | 1.02 | 116 | 0.48 |
| -23 | 34.47 | 12 | 7.91 | 47 | 2.50 | 82 | 0.99 | 117 | 0.47 |
| -22 | 32.87 | 13 | 7.62 | 48 | 2.43 | 83 | 0.97 | 118 | 0.46 |
| -21 | 31.35 | 14 | 7.35 | 49 | 2.36 | 84 | 0.95 | 119 | 0.45 |
| -20 | 29.91 | 15 | 7.09 | 50 | 2.30 | 85 | 0.93 | 120 | 0.44 |
| -19 | 28.54 | 16 | 6.84 | 51 | 2.23 | 86 | 0.91 | 121 | 0.43 |
| -18 | 27.25 | 17 | 6.60 | 52 | 2.17 | 87 | 0.88 | 122 | 0.42 |
| -17 | 26.03 | 18 | 6.37 | 53 | 2.11 | 88 | 0.86 | 123 | 0.41 |
| -16 | 24.87 | 19 | 6.15 | 54 | 2.05 | 89 | 0.84 | 124 | 0.41 |
| -15 | 23.77 | 20 | 5.94 | 55 | 1.99 | 90 | 0.83 | 125 | 0.40 |
| -14 | 22.73 | 21 | 5.73 | 56 | 1.94 | 91 | 0.81 | | |
| -13 | 21.74 | 22 | 5.54 | 57 | 1.89 | 92 | 0.79 | | |
| -12 | 20.80 | 23 | 5.35 | 58 | 1.83 | 93 | 0.77 | | |
| -11 | 19.91 | 24 | 5.17 | 59 | 1.79 | 94 | 0.75 | | |
| -10 | 19.06 | 25 | 5.00 | 60 | 1.74 | 95 | 0.74 | | |
| -9 | 18.26 | 26 | 4.83 | 61 | 1.69 | 96 | 0.72 | | |
| -8 | 17.49 | 27 | 4.68 | 62 | 1.65 | 97 | 0.71 | | |
| -7 | 16.76 | 28 | 4.52 | 63 | 1.60 | 98 | 0.69 | | |
| -6 | 16.07 | 29 | 4.38 | 64 | 1.56 | 99 | 0.68 | | |
| -5 | 15.41 | 30 | 4.24 | 65 | 1.52 | 100 | 0.66 | | |